Divan

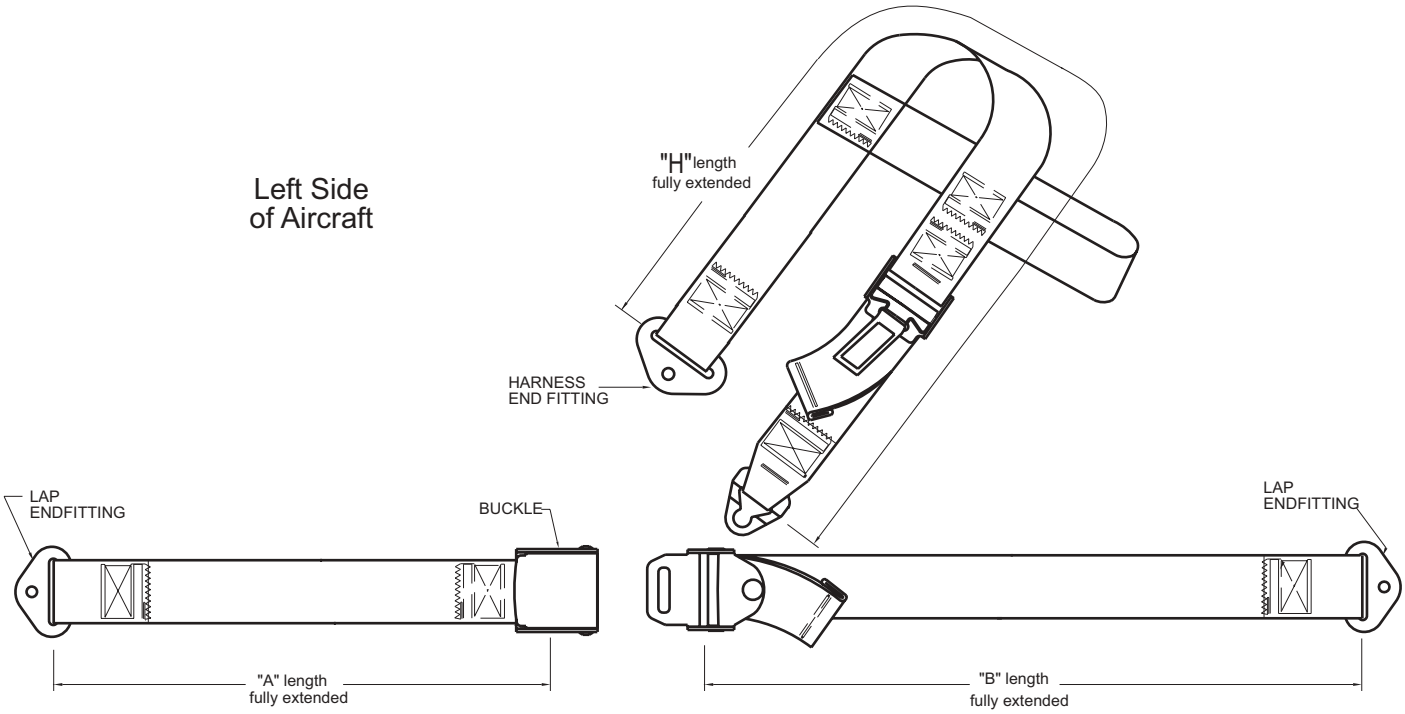

PART NO.

MM □□□□□□□ — □□ — □□□

MODEL | BUCKLE | A LENGTH FULLY EXTENDED | B LENGTH FULLY EXTENDED | H LENGTH FULLY EXTENDED | LAP | HARNESS (ENDFITTINGS) | COLOR CODE SEE COLOR CHART FOR SAMPLES

SAMPLE PART

M M E 2 5 3 0 5 4 - C E - 0 1 0

The divan restraint assembly is used for side-facing divan configurations. The lift lever buckle is a standard in the general and commercial aviation markets.

The ABISS line is made of stainless steel to prevent corrosion. Custom plating as well as engraving can be performed easily. Note: This restraint is made for the left side of an aircraft.

BUCKLE CODES		
CODE	P/N	DESCRIPTION
A	1A	35° ALUM. LIFT
B	1B	35° S.S. LIFT
E	1E	90° ALUM. LIFT
F	1F	90° S.S. LIFT

ENDFITTINGS

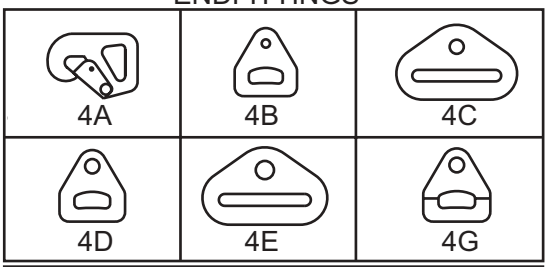

ENDFITTING CODES					
CODE	P/N	BOLT HOLE	CODE	P/N	BOLT HOLE
A	4A	.375 HOOK	D	4D	.386 HOLE
B	4B	.25 HOLE	E	4E	.406 HOLE
C	4C	.325 HOLE	G	4G	.386 HOLE

NOTES:
1. STANDARD BUCKLE IS ANODIZED ALUMINUM AND STAINLESS STEEL; PLATED METAL FINISHES AVAILABLE.
2. RESTRAINT ASSEMBLIES CONFORM TO FAA TSO C114.
3. IDENTIFICATION LABELS AFFIXED TO EACH HALF OF ASSEMBLY.
4. LAP ASSEMBLY RATED TO 3000 lbs, HARNESS ASSEMBLY RATED TO 2500 lbs.

Aircraft Belts, Inc.
1176 Telecom Drive
Creedmoor, NC 27522
Phone: 800.847.5651 - Fax 919.956.4220
www.aircraftbelts.com