5-point Rotary Automatic

with harness adjusters

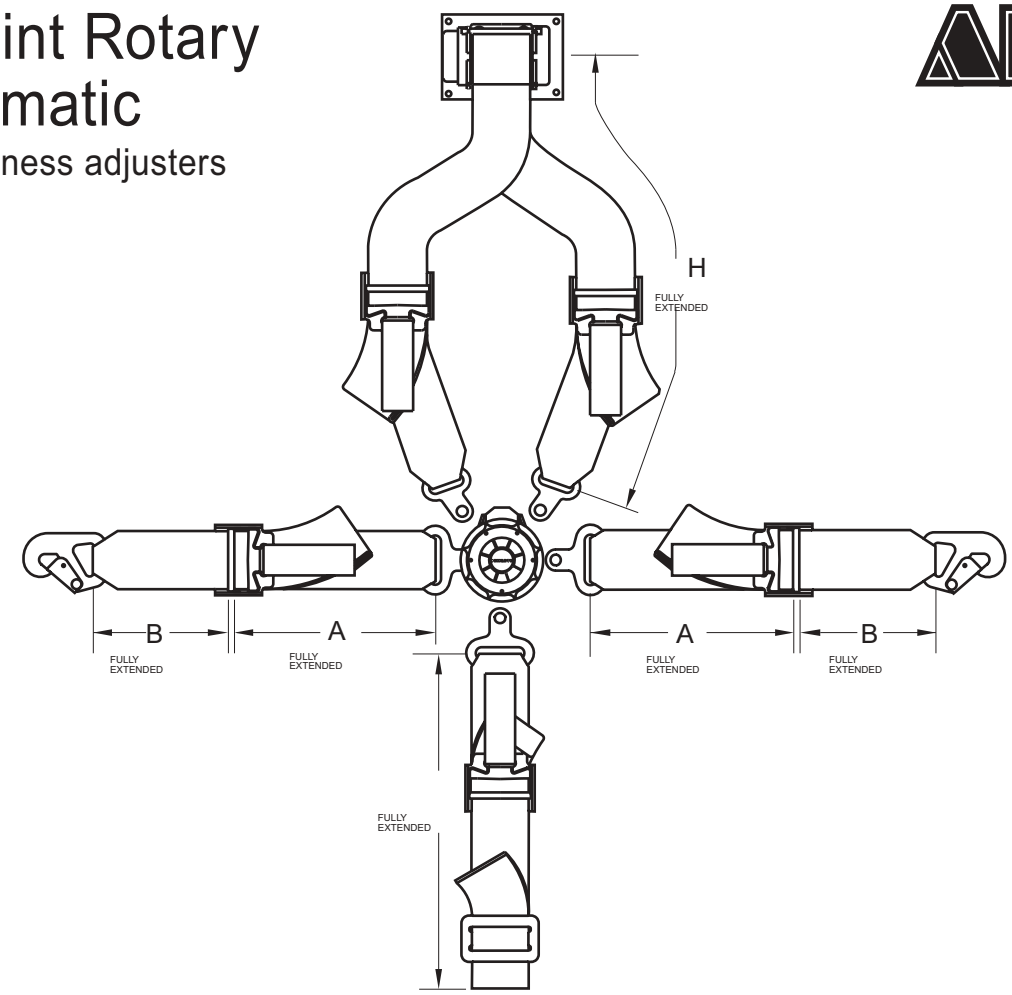

PART NO. SYSTEM

SC □□□□□□□□□□□-□□□A-□□□

END FITTING CODES

MODEL | BUCKLE CODE | ATT CODE | A LENGTH FULLY EXTENDED | B LENGTH FULLY EXTENDED | H LENGTH FULLY EXTENDED | C LENGTH FULLY EXTENDED | CROTCH | LAP | REEL CODE | COLOR CODE

SAMPLE PART

SCAB26304612-BEEA-601

The cam lock rotary is available in a 5-point or 4-point configuration. Dual shoulder harness attachments and an optional anti-sub or crotch strap ensure a proper fit for your requirements. Please check the reel selection page in this section to find proper reel.

BUCKLE CODES		PERM. BUCKLE ATTACHMENT	
CODE	P/N	CODE	DESCRIPTION
A	SL 10	B	LEFT
C	SL 11	C	RIGHT

ENDFITTINGS

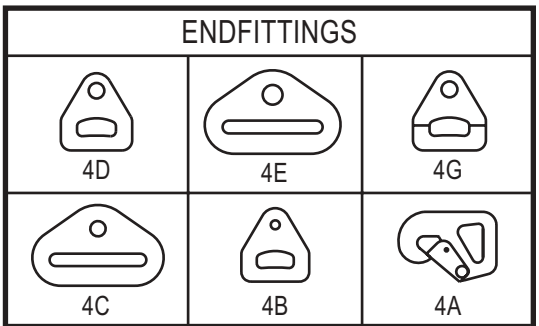

ENDFITTING CODES

CODE	P/N	BOLT HOLE	CODE	P/N	BOLT HOLE
A	4A	.375 HOOK	D	4D	.386 HOLE
B	4B	.25 HOLE	E	4E	.406 HOLE
C	4C	.325 HOLE	G	4G	.386 HOLE

1. Complete assembly conforms to FAA TSO C114
2. Identification labels affixed to each portion of the assembly.
3. Lap assembly rated to 3000 lbs. Harness assembly rated to 2500 lbs.
4. Rotary buckle is black polycarbonate, but an aluminum version is available for custom plating

Aircraft Belts, Inc.
1176 Telecom Drive
Creedmoor, NC 27522
Phone: 800.847.5651 - Fax 919.956.4220
www.aircraftbelts.com